DIMENSIONS FOR PACKAGED METERING MANHOLE

NOTE: CONFORM TO C.O.S. STANDARD DWG. 55 FOR ALL OTHER CONSTRUCTION CRITERIA NOT SPECIFIED HERE.

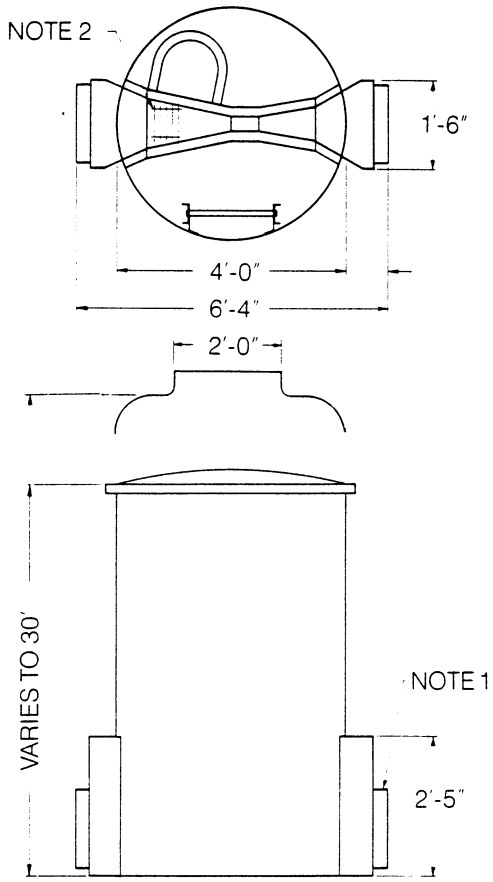

3" Parshall Flume

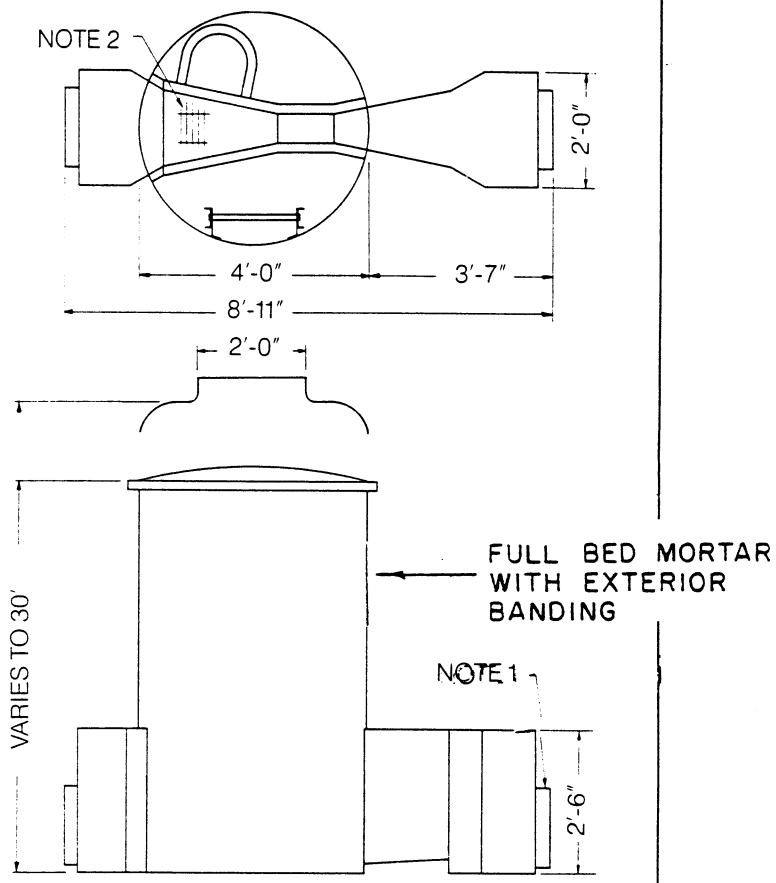

6" Parshall Flume

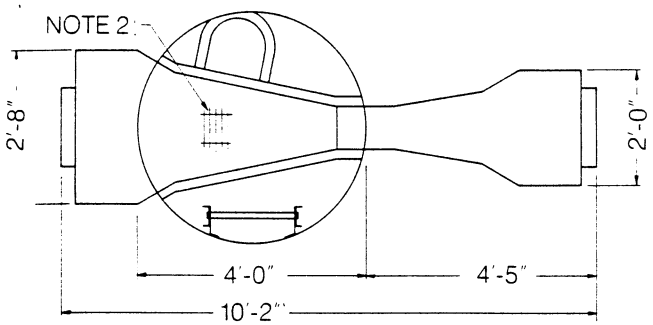

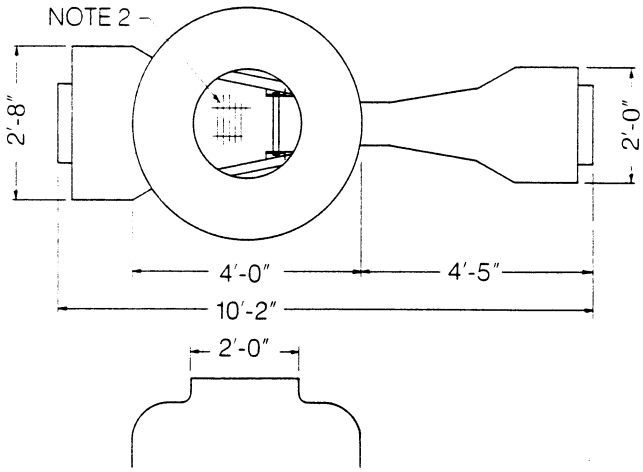

9" Parshall Flume

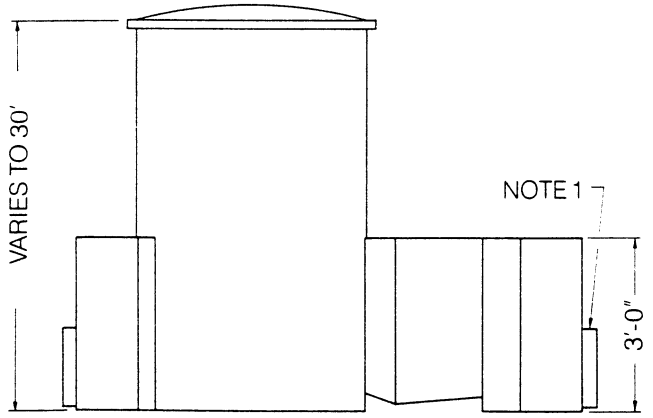

NOTE 1
Inlet and outlet sleeve size varies with connecting pipe diameter.

NOTE 2
Fiberglass grating or cover on flume optional.

NOTE 3 **TRAFFIC GRADE, LOCKABLE MANHOLE COVER REQUIRED**